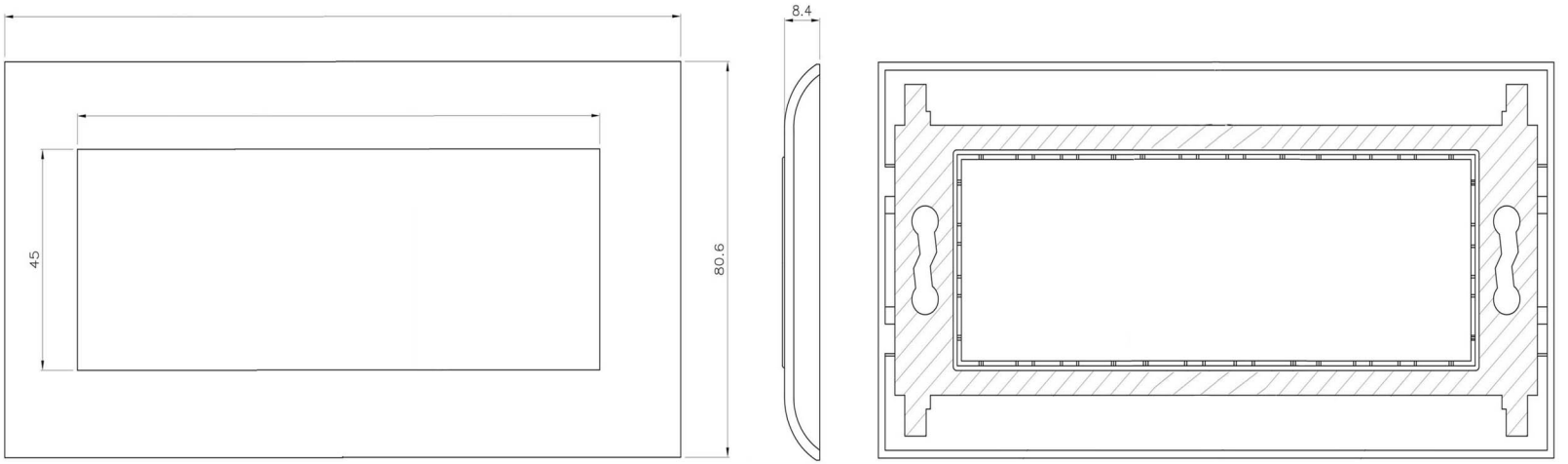

Specification

1. Material: ABS UL 94 HB.
2. Color: White & Ivory.
3. Bracket: Metal,multicolor planting.

GENERAL TOLERANCE OF DIMENSIONS X.XXX ±0.005 X.XX ±0.05 X.X ±0.1	DRAWING			e-net european netconnect
	CHECK			
	APPROVAL			
		DATE	NAME	ITEM NO.: E2026
	SCALE 1/1 (A4)	UNIT	mm	DES.: Mounted Double Face Plate for 2 Mod.45x45
		DRAWING NO.		
		DRAWING CLASSIFICATION	S	SHEET 1 OF 1 A1

"Products manufactured for E-NET" Detailed Specifications for the Manufacturer